TITLE: DELTA ADP-50H

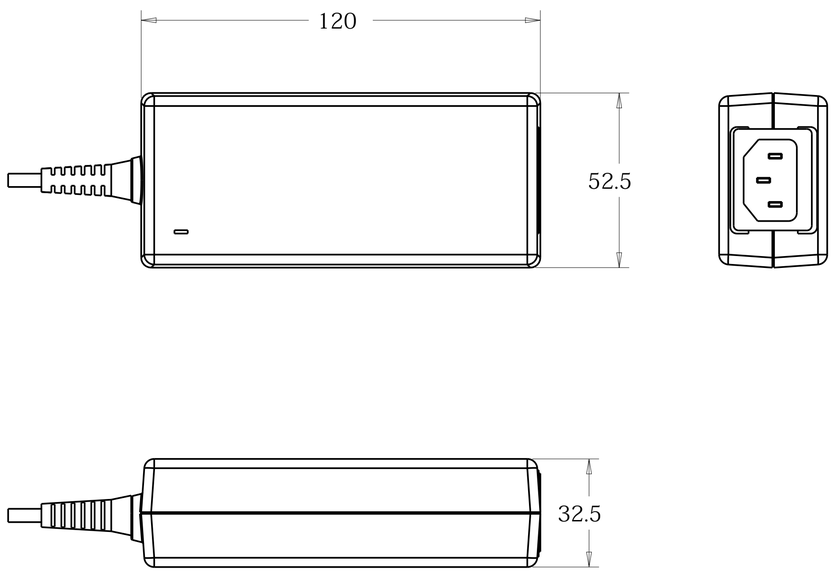

DIMENSIONS ARE IN MILLIMETERS

SHEET 1 OF 1

E182546_2
DATE: 06/16/17
REV: B