DIMENSIONAL DRAWING : Android Z30 ver5

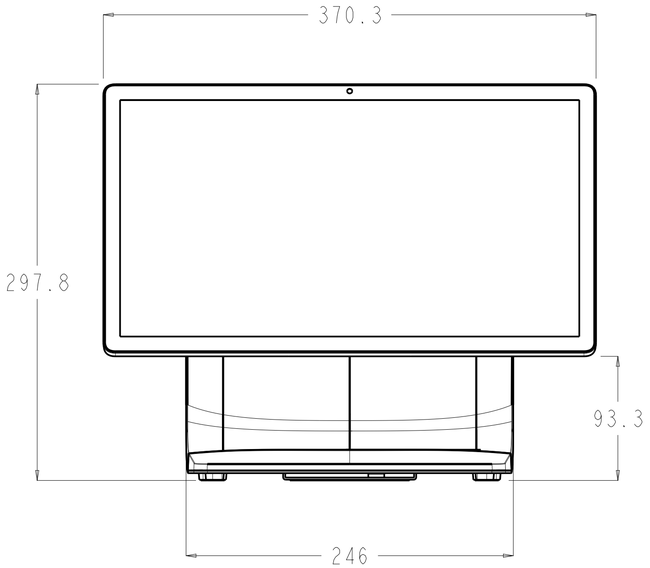

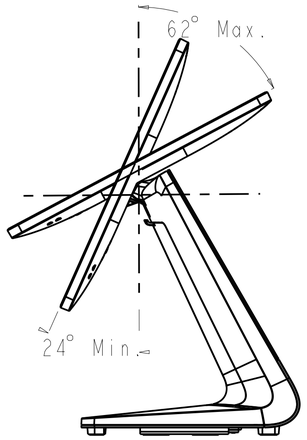

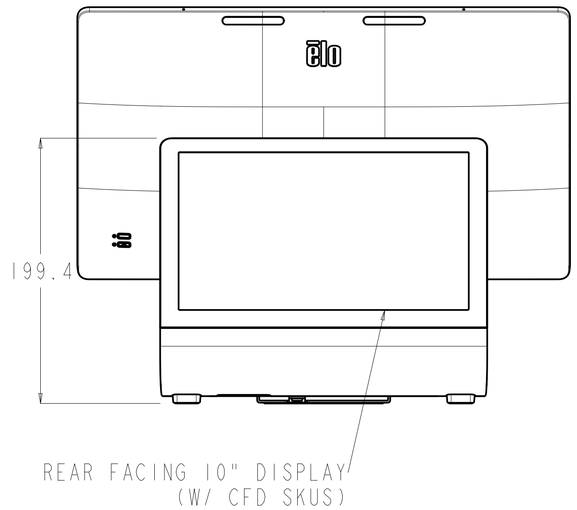

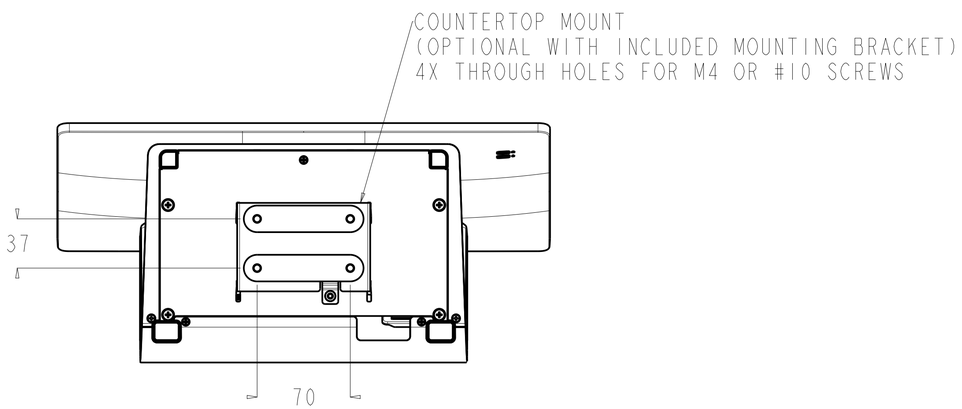

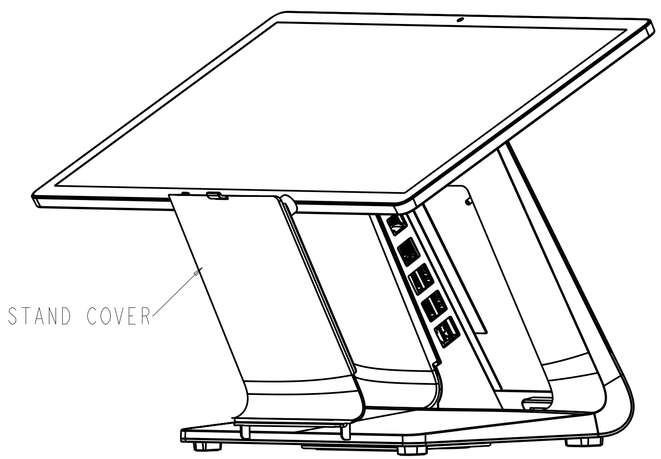

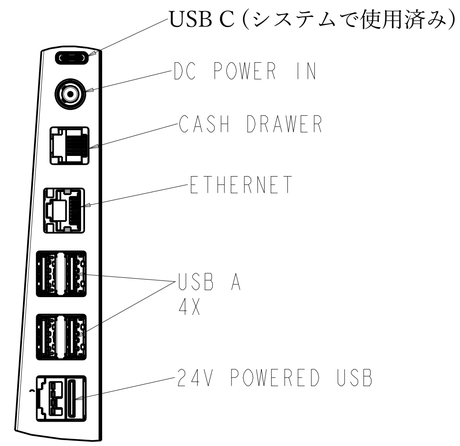

DIMENSIONS ARE IN MILLIMETERS

SHEET 1 OF 1

MS603447
DATE: 12/16/2025
REV: A1